PARTS LIST

EA-72

DRILL HEAD SPN-202Ui

This product is on RoHS spec product.

⚠Notice

1) Please acknowledge, we will stop the replenishment of stocks of parts when seven (7) years have passed after sale or ten (10) years have passed after suspended production, therefore becoming parts supply only of our stock's worth.
2) "Listed each prices" are up dated one (date of the price correction), please acknowledge it will be changed in the future without any prior notice.

ISSUE : September 05, 2013

CONSEC CORPORATION

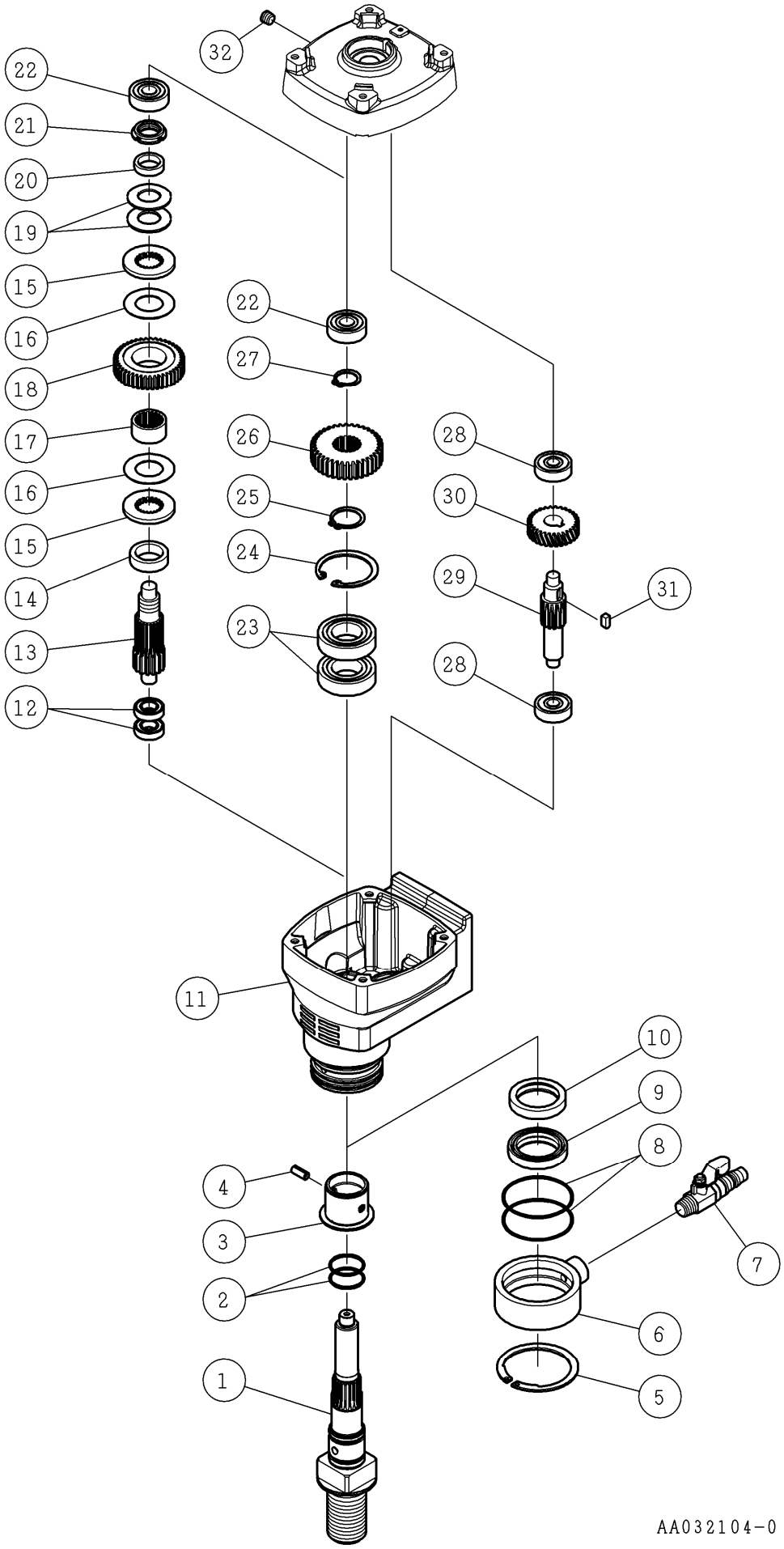
32
22
21
20
19
15
16
18
17
16
15
14
13
12
22
27
26
25
24
23
28
30
29
31
28
11
10
9
8
4
3
2
1
7
6
5
AA032104-0

NO.	CODE	DESCRIPTION / STANDARD	Q'TY	REMARKS	
1	002003794	Main shaft unify screw N201Ui	1		
2	003120261	O-ring S-26	2		
3	002003395	Bushing N201A	1		
4	003320612	Spring pin φ6×12	1		
5	003110583	Snap ring ISTW-58	1		
6	002101368	Feed water cover 6V	1		
7	003160496	Water cock 1/4 for coupler	1		
8	003120551	O-ring S-55	2		
9	003133548	Seal MHSA35488	1		
10	003133546	Seal MHSA35468	1		
11	002003396	Gear case N201A	1		
12	003016901	Ball bearing 6901ZZ	2		
13	002100769	Third pinion 15T 6N	1		
14	002100770	Spacer 6N	1		
15	002100447	Plate 6,M,ON,6N	2		
16	002100448	Friction plate 6,M,ON,6N	2		
17	002100771	Metal 6N	1		
18	002003397	Third gear 44T N201A	1		
19	002100451	Disc spring A-35.5 N,ON,6N	2		
20	002100452	Nut collar 6N	1		
21	002100453	Fine U-nut M17	1		
22	003016201	Ball bearing 6201ZZ	2		
23	003606005	Ball bearing 6005-2NSE	2		
24	003110471	Snap ring H-47	1		
25	003110250	Snap ring S-25	1		
26	002100774	Final gear 6N	1		
27	003110190	Snap ring S-19	1		
28	003016200	Ball bearing 6200ZZ	2		
29	002003398	Second pinion 13T N201A	1		
30	002100768	Second gear 29T 6N	1		
31	002001048	Woodruff key 5×5×11	1		
32	003160248	Hex. socket cap plug 1/8"	1		

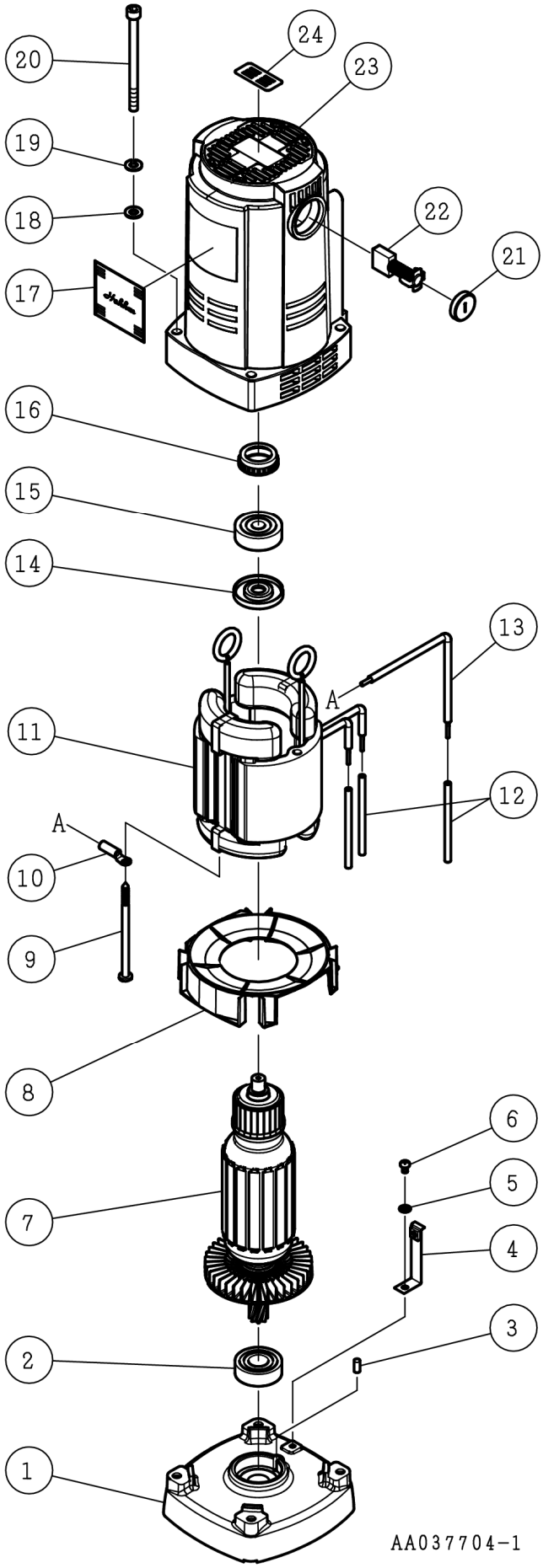
20
24
23
19
18
22
21
17
16
15
14
13
A
11
12
A
10
9
8
6
5
7
4
3
2
1
AA037704-1

NO.	CODE	DESCRIPTION / STANDARD	Q'TY	REMARKS	
1	002102115	Inner cover N160A	1		
2	003626003	Ball Bearing 6003LLH	1		
3	002003967	Bearing lock φ4.6×10 (New)	1	After No.0714001	
	~~002100149~~	~~Bearing lock 6N~~ (Old)	~~1~~	~~While stocks last~~	
4	002003917	Earth Plate N202A	1		
5	003490401	Toothed washer (E) 4	1		
6	003410406	Round head. screw M4×6 (B)	1		
7	002102548	Armature 230V N1MT (New)	1		
	~~002102380~~	~~Armature 230V N1MT~~ (Old)	~~1~~		
8	002102386	Baffle Plat N1MT	1		
9	002004276	Hex. Socket Bolt 5×85 Trivalent chromate Dry N1MT※1 (New)	2		
	002102387	Tapping Screw 5×85 (Half Thread) N1MT (Old)	2		
10	002102398	Crimp - style Terminal R1.25-5	1		
11	002102383	Field 230V N1MT	1		
12	002102396	Insulating Tube 140mm N1MT	3	Two attachment to 11	
13	002102397	Lead 330mm (Transparence)	1		
14	002102228	Insulating Washer F1MT	1		
15	003616200	Ball Bearing 6200-2NKE※1 (New)	1		
	003616000	Ball Bearing 6000-2NKE (Old)	1		
16	002102232	Rubber Ring with Lip 26 F1MT (Old)	1		
17	002003918	Hakken Seal 47×50	1		
18	003330600	Flat Washer (R) 6	4		
19	003340600	Spring Washer Ⅱ 6	4		
20	003380685	Hex. Socket Head Cap Screw M6×85	4		
21	002102231	Holder Cap F1MT	2		
22	002102230	Carbon Brush F1MT	1set		
23	002102538	Motor Housing Assy. N1MT※1 (New)	1		
	002102384	Motor Housing Assy. N1MT (Old)	1	While stocks last	
24	002003919	Line Seal 17×36	1		

※1 In case of changing「Motor Housing Assy. N1MT, No.23」, both「Hex. Socket Bolt 5×85 Trivalent chromate Dry N1MT ,No.9」and「Ball Bearing 6200-2NKE ,No.15」must be changed together.
But「Rubber Ring with Lip 26 F1MT,No.16」doesn't need to use for new「Motor Housing Assy. N1MT, No.23」.

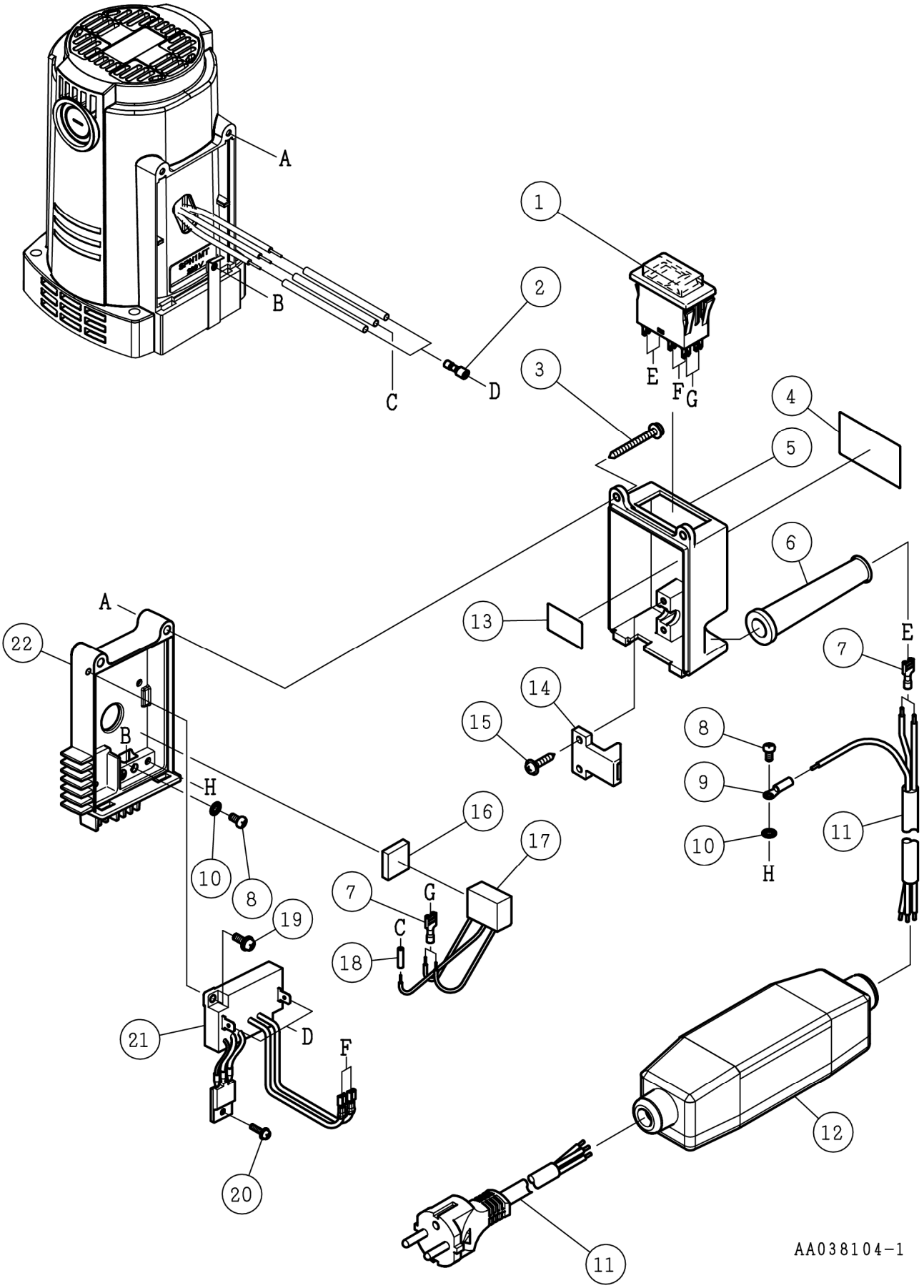
A
B
C
D
1
2
3
4
5
6
7
8
9
10
11
12
13
14
15
16
17
18
19
20
21
22
E
F
G
H
AA038104-1

NO.	CODE	DESCRIPTION / STANDARD	Q'TY	REMARKS	
1	003150337	Breaker 3120-F524 10A	1	N7T1-W01D	
2	003150339	Tab Terminal FVDHDF-2-250B	2		
3	003160572	WH Round head. tapping screw A 4×40	2		
4	002003926	SPN-202Ui Name Plate Caution	1		
5	002003453	Switch box Ⅱ SP200A	1		
6	002002615	Cord sheath 8A2i	1		
7	003150324	Tab Terminal FVDHDF-1.25-250B	4		
8	003410408	Round head screw M4×8 (B)	2		
9	003150331	Crimp style terminal N1.25-M4	1		
10	003490401	Toothed washer (E) 4	2		
11	003150210	Cord H07RN 3×1.5 2P 2.7m	1	Cut in the middle	
12	003150876	PRCD (SHI/PDL)	1		
13	002001985	Switch box seal N8V2i	1		
14	002001794	Cord clip 6V	1		
15	003160421	WH tapping screw A 4×20	2		
16	003160636	Soft tape 20×18×5t	1		
17	003150408	Noise suppressor XYE224332BN	1		
18	003150087	Crimp-style terminal NC-2.0	1		
19	003392412	Round head. screw M4×12 P4	2		
20	003390312	Round head. screw M3×12 P3	1		
21	002102213	Soft starting circuit M300U2i	1		
22	002003454	Heat sink M300U2i	1		

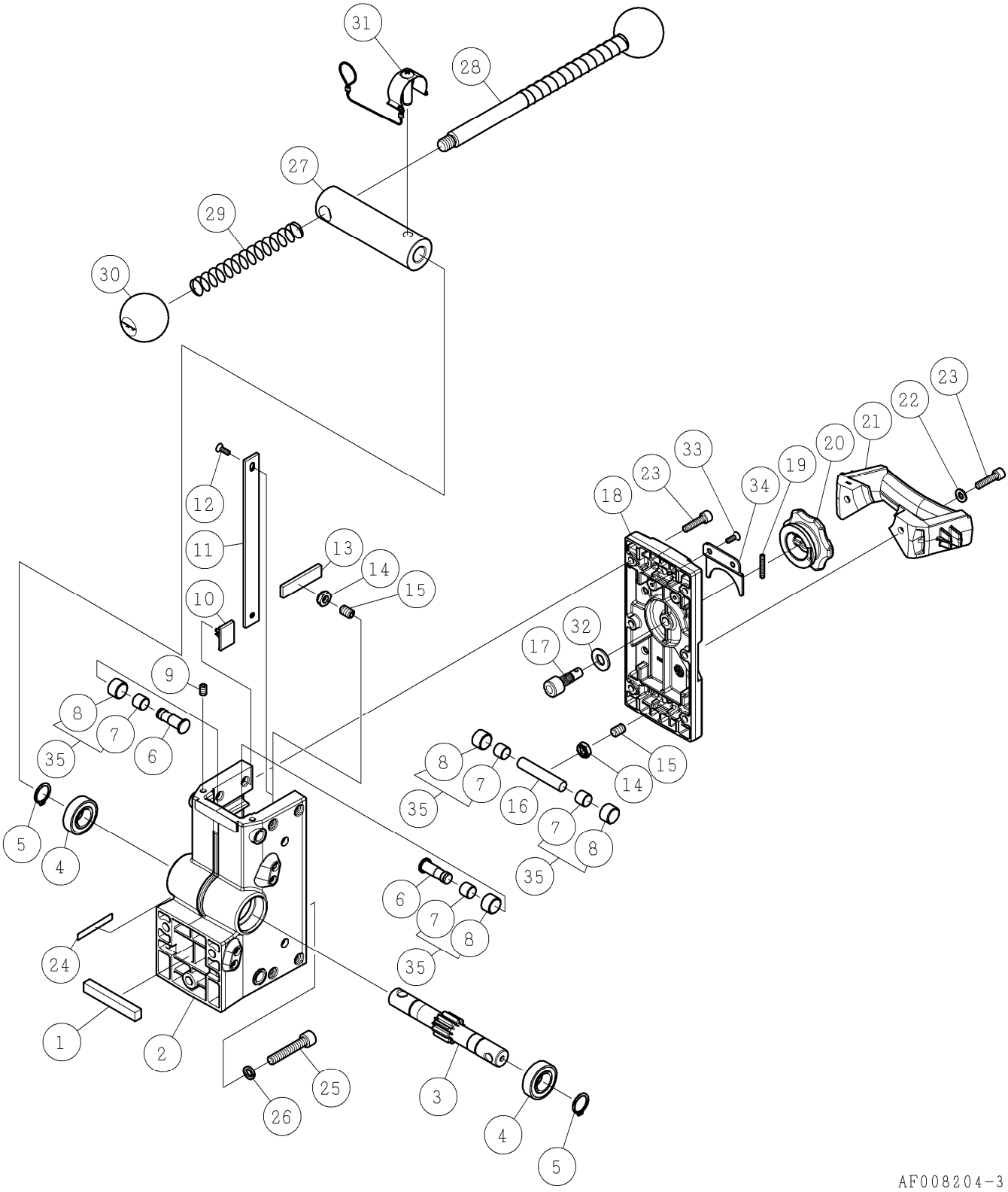
31
28
27
29
30
23
22
21
20
19
34
33
23
18
12
11
13
14
15
10
32
17
9
8
7
6
35
5
4
24
1
2
25
26
3
16

AF008204-3

NO.	CODE NO.	DESCRIPTION / STANDARD	Q'TY	REMARKS	
1	002002466	Key 10×10×67 C493	1		
2	002003295	Clamp main body C493	1		
3	002003296	Shaft gear 10T C493	1		
4	003606003	Ball bearing 6003-2NSE	2		
5	003110170	Snap ring S-17	2		
6	002003297	Terrace shaft C493	4		
7	———	Dry bearing DDK05 K5B1010	8		
8	———	Roller C493	8		
9	003420610	Hex. socket set screw (H) M6×10	4		
10	002001010	Slide plate S 6N,M55	4		
11	002001011	Slide plate L 6N	2		
12	003250412	Countersunk hd. screw M4×12	4		
13	002003299	Plate C493	2		
14	003160574	U-nut (III) M8 h5	4		
15	003220831	Hex. socket set screw (F) M8×12	4		
16	002003303	Shaft C493	2		
17	002003300	Lock pin C493	1		
18	002003506	Clamp cover Ⅱ C493	1		
19	003220425	Hex. socket set screw (H) M4×25	1		
20	002003401	KnobⅡ C493	1		
21	002003304	Grip C493	1		
22	003330600	Flat washer (R) 6	2		
23	003210625	Hex. socket head cap screw M6×25	6		
24	———	CL-493 Name plate	1		
25	003210845	Hex. socket head cap screw M8×45 (C)	3		
26	003340802	Spring washer for CS 8	3		
27	002003390	Handle boss Z250A2	1		
28	002000025	Handle	1		
29	002001792	Spring for handle 6V	2		
30	002003308	Knob ball Black C493	2		
31	002003309	One touch pin C493	1		
32	003161068	Nylon Round Flat Washer 10.5×22×1	1		
33	003500416	Hex. Socket Flat Head Bolt M4×16	2		
34	002003445	Knob Support C493	1		
35	002004104	Roller Assy. C493	8set	Insert 7 into 8	

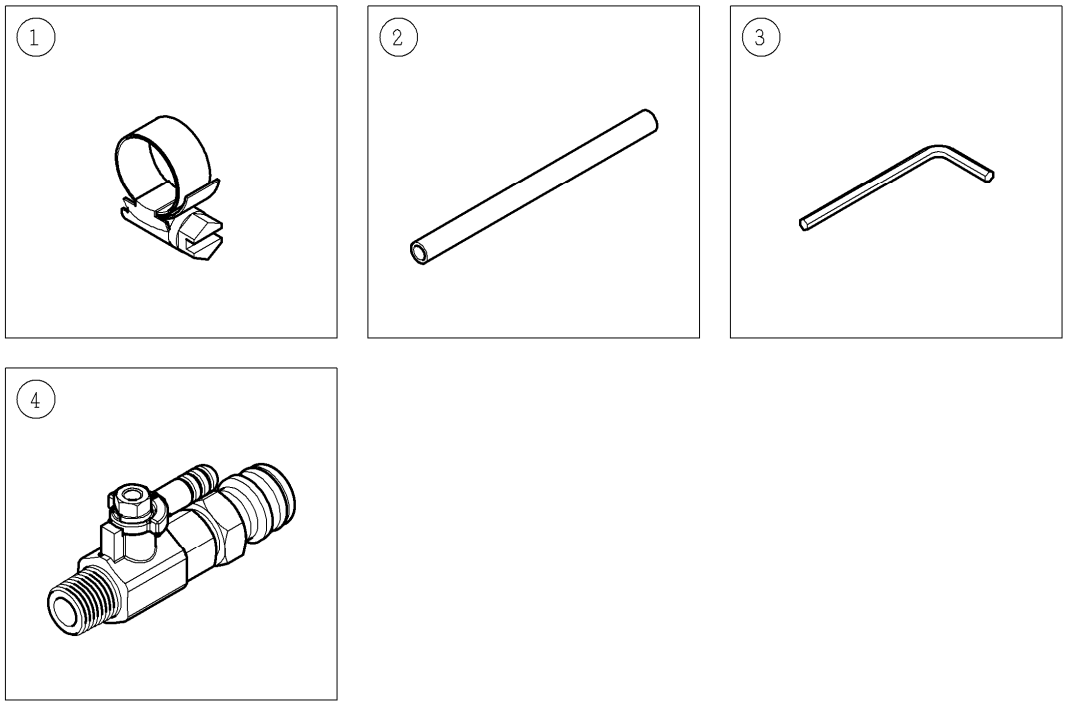

AF008404-1

NO.	CODE NO.	DESCRIPTION / STANDARD	Q'TY	REMARKS	
1	003160635	Hose band 00	1		
2	003160634	Hose 12×250	1		
3	003160087	Hex. bar wrench 4mm	1		
4	———	Water Cock 1/4"GARDENA	1	※EG-19	