Hakken

DIAMOND CORE DRILL

SPN-202Uw

INSTRUCTION MANUAL

◎ Thank you for purchasing our products.

◎ Before using, please read Instruction manual carefully, and use the machine safely by following the instructions.

◎ After reading, please keep it where anyone can utilize.

CONSEC CORPORATION

MEANING OF SIGNAL WARDS ⚠WARNING & ⚠CAUTION

The instruction manual includes two signal words ; ⚠WARNING & ⚠CAUTION which are meant as follows.

⚠WARNING: It is assumed that if the user uses the machine wrongly, it would be the risks that the user could be died or injured.

⚠CAUTION: It is assumed that if the user uses the machine wrongly, it would be the risks that the user could remain the disabled or damage for the materials.

"CAUTION" might cause the serious accidents depending on the situations. Since we mention the important notices, please strictly follow the instruction in order to avoid the accidents.

“Diamond core drill” is described as “Core Drill” in context.

“Diamond core bit” is described as “Core Bit” in context.

CONTENTS

1.WARNING AND CAUTION
【1】Safety Notice for Electric Tools ····· 2
【2】Notes for Usage of Core Drill ····· 4
2.DESCRIPTION ····· 6
3.SPECIFICATIONS ····· 7
4.STANDARD ACCESSORIES ····· 7
5.APPLICATIONS ····· 7
6.GENERAL DRAWING AND SPECIFICATIONS IN OPERATION ····· 8
7.OPERATIONAL INSTRUCTIONS
【1】Anchoring Core Dill ····· 9
【2】Anchoring Core Drill by Anchor Bolt ····· 9
8.MAINTENANCE AND SERVICING
【1】Maintenance ····· 11
【2】Regular Servicing ····· 11
9.FOR REPAIRING ····· 13
10.WARRANTY ····· 13

1. WARNING AND CAUTION

◎ To avoid the risk of fire, electric shock and personally injury, follow all the instruction mentioned in "Safety Notice for Electric Tools" and "Notes for Usage of Core Drill".

◎ Before using, please read "WARNING & CAUTION", and follow the instructions for your safety.

◎ After reading, keep the manual in that anyone can utilize as for the reference.

【1】Safety Notice for Electric Tools

⚠ WARNING

1. Do not use for other than specified purposes.

2. No one allow to get close to the working area except the workers.

◎ No one allow to contact to the electric tools and cord except the workers.

3. Avoid dangerous environments.

◎ Do not use the electric tools in the rain, moisten and wet place.

◎ Keep working area lightly.

◎ Do not use the machine where there are flammable gas or flammable liquid.

◎ Cluttered work areas invite accidents.

4. Wear appropriate work clothes.

◎ Do not wear the loose clothing or jewelries in order to avoid to being caught in the rotating parts.

◎ Wear rubber gloves and slip stopper footwear.

◎ Wear cap or hair cover in case that you have long hair.

5. Wear safety glasses.

◎ Wear safety glasses during working. If there is dust, please wear the dust mask.

6. Do not work with improperly posture.

◎ Fix the footing and maintain the balance at all times.

7. Work carefully without staying alert.

◎ When using the electric tools, please operate carefully by considering operation methods, how to use and surrounding area.

◎ Do not come close to the rotating parts. It will be dangerous to being caught in or injured.

◎ Be careful for not to tuck the hands and the foots into the moving parts or connecting

◎ Do not use machine when you are tired or distracted.

8. Be careful for receiving electric shocks.

◎ During operation, be careful for not to contact your body to the objects which are grounded such as microwave and refrigerator and so on.

◎ Use power source equipped with earth leakage breaker.

9. Do not treat the cords and the hoses roughly.

◎ Do not carry the electric tool by holding the cord.

◎ Do not remove the machines by pulling the cord from the power receptacle.

◎ Do not get close the cord near the heat, oil and sharp objects.

⚠ WARNING

10. Use CONSEC recommended accessories and options.

◎ In case that you use the accessories and the options which are not listed in the manual or CONSEC's catalogue, it might cause the accidents or personal injury. Please do not use the accessories and the options which CONSEC does not recommend.

11. Inspect for the damaged parts.

◎ Before using, please inspect the protection cover and other parts damages carefully, and make sure that whether the machine operate properly and the designed functions work or

◎ Check for alignment, binding of moving parts, parts damages, mounting, and any other conditions that may affect operation.

◎ Regarding the exchange or the repair for the damaged parts, please follow the

◎ In case that there are no instructions in the manual, please contact to the distributors or

◎ Do not use the electric tool if the switch cannot be turned on or off.

◎ If the switch is broken, please contact to the local distributors or CONSEC for repairing.

12. Turn the electric tool off and remove the plug from the power supply as following cases.

◎ In case that the machines is not used or repaired.

◎ When exchanging the options such as blade or core bits.

◎ In case that you can anticipate other hazardous situations.

13. Remove the key or the wrench for sure.

◎ Before turning on the switch, please make sure that the key and the wrench which are used for the inspection and adjusting are removed.

14. The electric machines are maintained carefully.

◎ Regarding exchanging the options, please follow the instruction.

◎ Keep the grip dry and clean, and avoid the oil or grease.

◎ Inspect the cord regularly. In case that there are damages, please contact to the distributors or CONSEC for repairing.

◎ In case that you use the extended cord, inspect it regularly. If there are damages, please replace it.

15. In case that you do not use the tools, please store it appropriately.

◎ Store the place where keep children away, locking is available and dried place.

16. Avoid accidental starting.

◎ Do not carry the tools with connecting to the power supply.

◎ Before plugging the plug into the power supply, please make sure that the switch is off.

17. Use an appropriate extension cord for outdoors.

◎ In case that you use it in outdoors, please use the extension cord of cab tire cord or cab tire cable.

18. Use the appropriate tools according to your work.

◎ Do not use the small electric tools and accessories for the work which is done by using the large electric tools.

19. Contact CONSEC's sales (service) representative for repairing of the electric tools.

◎ The machine is manufactured in compliance with applicable safety standards.
Do not remodel machine and tool.

◎ In case that the unauthorized person repairs it, it might cause the machine failure, accident or personal injury.

◎ Contact to CONSEC’s sales (service) representative for repairing.

【2】Notes for Usage of Core Drill

(In case of combination with CONSEC's original Drill Carriage Assy. and Pole Base.)

⚠ WARNING

1. Check for the embedded conduit etc.

◎ In case that you contact to the electric wire or conduit in that there are electric current, you may receive the electric shocks.

◎ Before drilling the wall or the floor, check for the embedded conduit etc adequately.

2. Be sure to wear the rubber gloves and the rubber shoes.

◎ Since this machine uses the water, be sure to wear the rubber gloves and the rubber

3. Do not use for the ceiling plane.

◎ Since the core drill is used the water, it is extremely dangerous to drill for the ceiling plane due to flowing the water into the inside of motor.

4. Regarding the operation of high-place work, please follow the applicable laws and regulations .

◎ Secure the safe scaffold, and do not operate the machine 1.5m higher than the scaffold.

◎ In case that you work at high place, secure the enough scaffold space and secured scaffold.

◎ In case that you work at high place, keep any person away under your working area.

5. Be careful for the safety of the penetration side.

◎ When drilling for the penetration, cutting core bit might fall out or the cutting water might be leaked. Therefore, please do the safeguard and the drain water handling in order not to avoid to hit the human beings or objects. Then, please start operating.

6. Use the proper voltage which is indicated on the nameplate.

◎ In case that you apply for the voltage which is over the indicated voltage, it will cause the accidents.

7. Fix the Pole Base properly.

◎ It is extremely important to fix the pole base securely. If it is not fixed securely, the core bit might be damaged by rattling of core drill or jammed.

8. Use the Water Collector for sure.

◎ Use Water Collector pad for sure in order to avoid the water flowing into the inside of motor by flying apart the water during operation.

◎ When using Water Collector, please install it adequately in order not to leak the water.

9. Do not contact to the rotating Core Bit and Main Shaft.

◎ Do not contact your hands and body to the rotating Core Bit and Main Shaft. It might be caught in or injured.

10. Do not block the air hole of motor, and do not put the materials into the air hole.

11. Turn the switch off immediately if any abnormality is found.

◎ When the Core Bit stops or you hear the strange noise during the operation, please turn switch off immediately.

12. In case that you use Vacuum Pad for fixing the Pole Base, please do not use the Automatic Feeding System.

◎ The Pole Base comes up, and it is extremely dangerous.

13. Asbestos is the harmful to human beings. In case that you drill containing such materials, please follow the applicable laws and regulations, and take a measure for dust control.

14. Do not use the Core Bit which has a outshoot.

◎ If the rotating objects has a outshoot, it might be the risk for being caught in or injured.

15. Do not use the Core Bit which exceeds the maximum diameter of core bit.

⚠ CAUTION

1. Do not overload with Core Drill.

◎ Use the machine according to the machine capacity of specifications in order to use safely and efficiently.

2. When drilling, please supply the water for sure.

◎ Overheating of Core Bit reduces not only drilling performance but also its life. So make sure to keep supplying water during drilling operation.

◎ Use clean water only. Using the dirty water may cause machine failure.

3. Do not turn on the motor with Core Bit facing to the drilling surface.

◎ It causes the damages for core bit and core drill.

4. When starting the drilling, please wait until the rotating is increased.

◎ Regarding the drilling work, turn the switch on and wait until the rotating is increased fully.

5. Do not stop rotating of core bit by forcing the power on the feeding handle during drilling, and do not lock the core bit.

◎ It might cause the damages for the chip of Core Bit and core drill.

6. When releasing your hands from the feeding handle, please make sure that L bolt is tighten, then, fix the Drill Head.

◎ When loosening L bolt, please hold the feeding handle in order not to move the Drill

2. DESCRIPTION

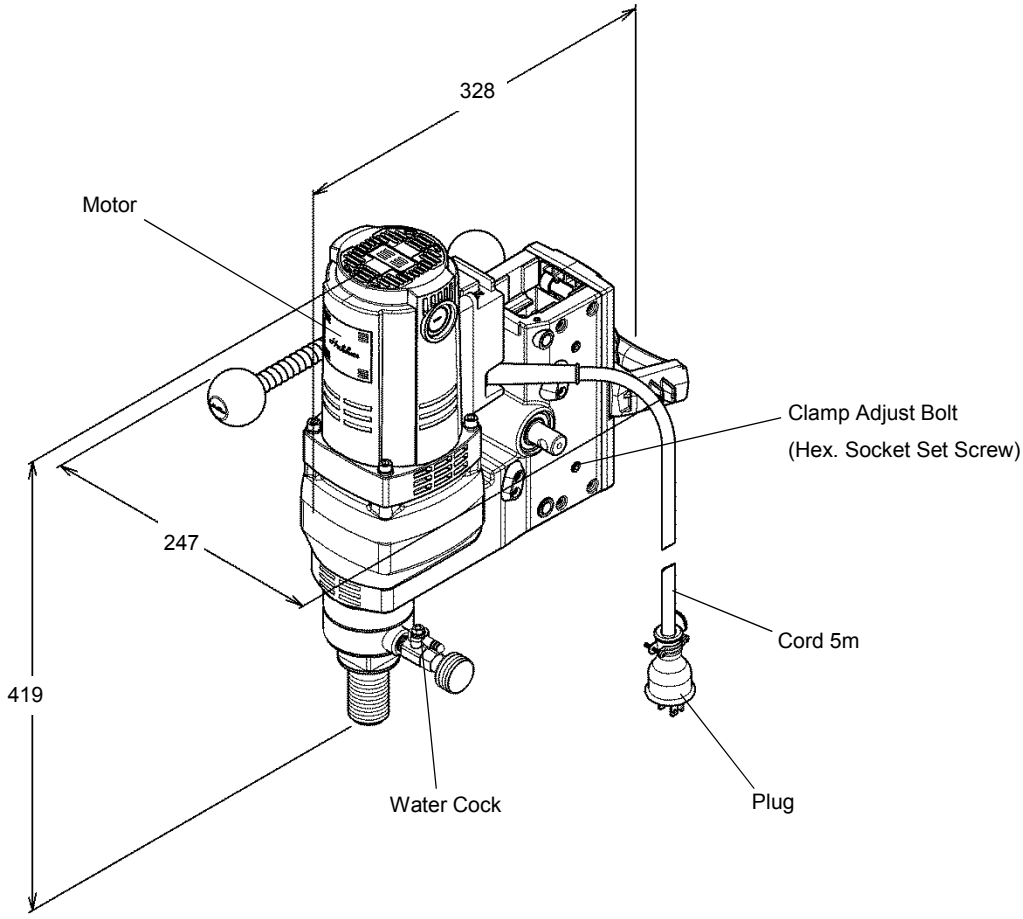

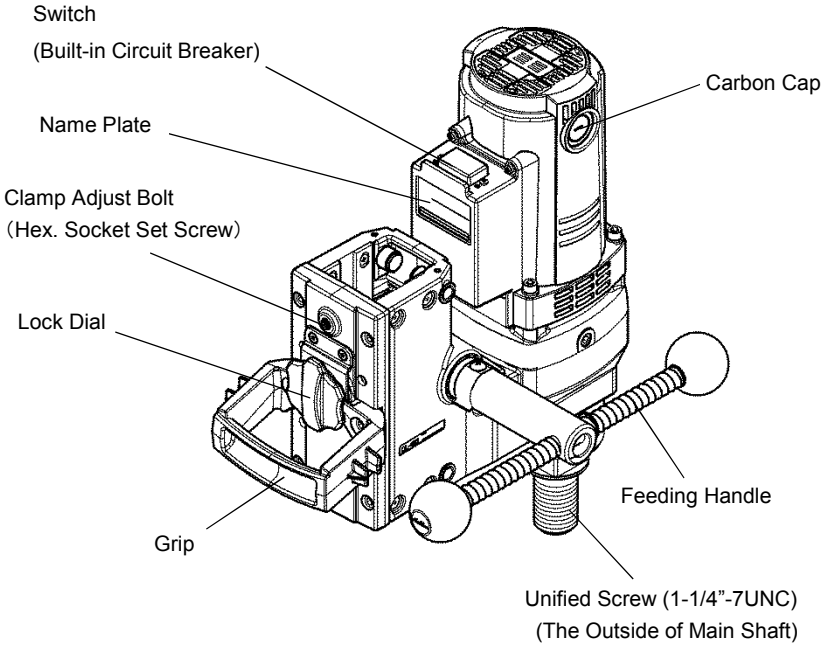

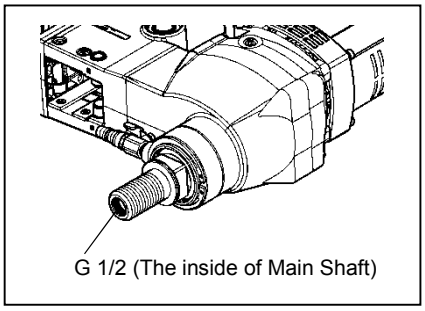

3. SPECIFICATIONS

Model		SPN-202Uw
Motor		Single phase series commutator motor
Power Supply		Single-phase A.C. 120V 50/60Hz
Rated Current		15A
Max. Output		2400W
No Load Speed		700min^{-1}
Max. Bit Dia.		205mm(8")
Core Bit Installing Screw	Outside	Unified screw (1-1/4”-7 UNC)
	Inside	G 1/2
Drill Head Weight (Excluding cord)		11.0kg

4. STANDARD ACCESSORIES

◎ **Hex. Bar Wrench 4mm** ····· **1**

◎ **Instruction Manual** ····· **1**

5. APPLICATIONS

This tool is Core Drill for drilling in concrete.

◎ Core drilling in concrete for road, dam, tunnel and bridge construction.

◎ Sampling test pieces.

◎ Core drilling of pilot hole for guard rail post and fence post.

◎ Core drilling in concrete for wiring and plumbing for air conditioning, telephone, electricity, water and gas supply.

6. GENERAL DRAWING AND SPECIFICATIONS IN OPERATION

◎ Core drill installed on to □49 Pole Base SB-491-1000.

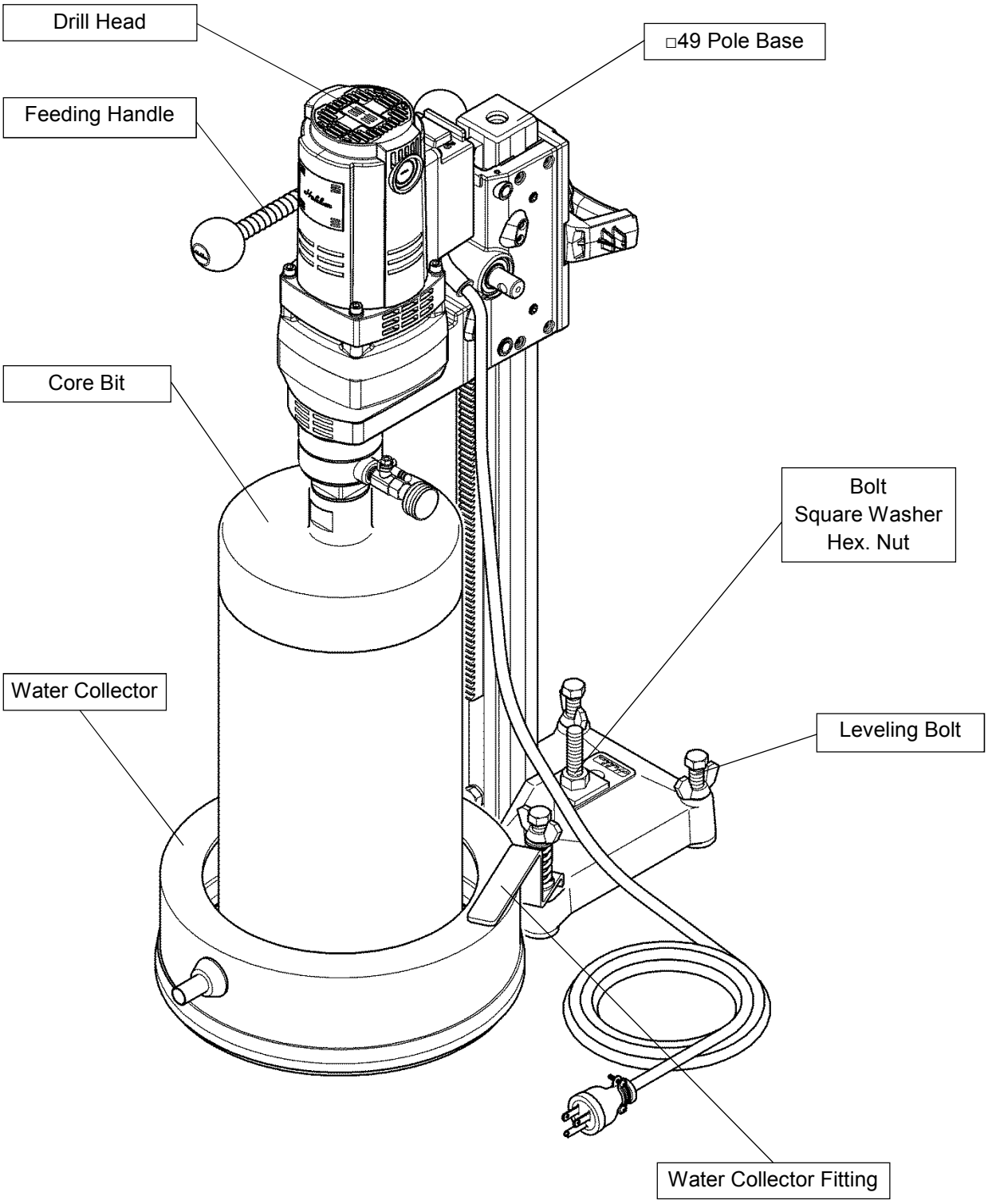

7. OPERATIONAL INSTRUCTIONS

【1】Anchoring Core Drill

◎ Core drill can be anchored by means of Anchor Bolt, Vacuum Pad or Support Jack.
Follow the below procedures for bolt anchor method.

【2】Anchoring Core Drill by Anchor Bolt

1. Installation of anchor bolt

1) Drill anchor bolt hole, using a hammer drill.
2) Set anchor bolt (W1/2) into the hole.

2. Installation of core drill

1) Screw bolt (W1/2) into Anchor Bolt.
2) Insert bolt (W1/2) into the slot of Pole Base and fasten square washer and hex. nut (W1/2)
3) Install Drill Head onto pole.
4) Adjust the position of Pole Base so as to align main shaft with the hole to be drilled.
5) Adjust leveling with leveling bolts so as to eliminate rattling of pole base. After completion of adjustment, secure leveling bolt with wing nut.
6) Tighten hex. nut (W1/2) to secure Pole Base.
7) Set desired rotating speed with speed change knob.

3. Installation of core bit

◎ Thread core bit onto main shaft.

4. Installation of Water Collector

⚠ WARNING
Be sure to use Water Collector to prevent spattered water from getting into motor during operation.

◎ Secure Water Collector with Water Collector Fitting.

5. Arrangement for water disposal

◎ Receive water into a bucket by connecting a hose with drain port of water collector or suck water through drain port using a vacuum cleaner.

6. Arrangement for water supply

◎ Connect a hose between a water source and water cock using Hose Adapter.

⚠ WARNING
Do not stop water supply during operation.

7. Core drilling

⚠ WARNING
When drilling a through-hole, take proper measures to provide for protection on the other side where core bit penetrates.

1) Turn switch off and plug in.

⚠ WARNING
To prevent accidental starting, make certain that motor switch is in OFF position before plugging your machine.

2) Turn on a water tap and open water cock slowly, adjusting water flow.

⚠ CAUTION
Allow water to flow at about 2L per minute.

3) Turn switch on to drill with feeding handle. Start drilling by turning feeding handle slowly until core bit comes in light contact with work surface. While starting to drill, apply light pressure on feeding handle until drill bit penetrates to 5-10mm depth. Then keep drilling under uniform pressure.

⚠ WARNING
1. If motor is switched on with Core Bit contacts on the work surface, it causes core bit fracturing or core drill failure, resting in hazardous accidents. 2. Wait until the rotation of core bit increases to the full and then start drilling. 3. Since drill bit often wanders at the starting, turn feeding handle slowly applying light pressure to prevent bit wandering. Allow water to flow at about 2L per minute

8. After completion of drilling

1) Remove water hose and Water Collector.
2) Remove Core Bit.
3) Remove Drill Head from Pole Base.
4) Loosen hex. nut and dismount Pole Base.

8. MAINTENANCE AND SERVICING

【1】Maintenance

1) Clean the surface of the machine after using.

Regarding the outer frame of the Drill Head, the part of the gear case is made of aluminum, and the part of the motor is made of the sturdy synthetic resin.

If gasoline, thinner, petroleum or kerosene are adhered to the outer frame of the Drill Head, the surface of the Drill Head will be damaged.

When you clean the out frame of the Drill Head, use the dried cloth or the cloth which is soaked with the soapy water.

2) Maintenance for motor.

After entire operation is over, secure Drill Head onto Pole Base, run motor with no-load and remove dirt and dust from motor interior.

【2】Regular Servicing

1. Checking of Carbon Brush

1) How to check

Remove Carbon Brush Cap using the flathead screw driver etc., and take Carbon Brush out. After inspecting, tighten the carbon cap.

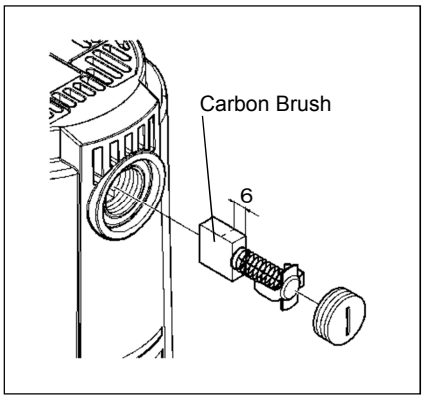

2) Item to be checked

○ If the wearing of the Carbon Brush increases, it will be caused motor failure. Check it regularly, and if the length of carbon brush is worn up to the wear limit line (6mm), replace with new ones.

○ Keep the Carbon Brush clean for free sliding in brush holder.

⚠ CAUTION
Use HAKKEN genuine Carbon Brushes for replacement.

2. Checking and adjustment of Drill Carriage Assy.

(In case of combination with □49 Drill Carriage Assy.)

◎ Set Drill Head onto Pole Base. While moving feeding handle, tighten 4 pieces of hex. socket set screws on Drill Carriage Assy. in good balance with hex. bar wrench and adjust the gap between Pole and Drill Carriage Assy.

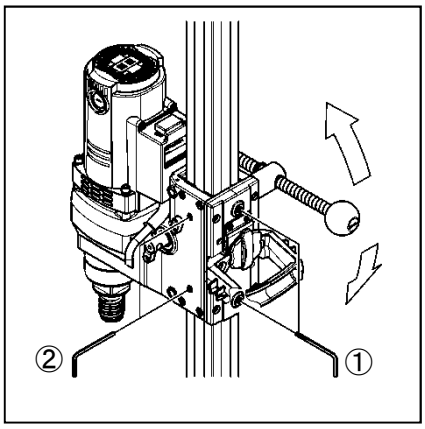

⚠ CAUTION
If hex. socket set screws are fastened too tight, feeding handle gets heavy. When slide plate is worn and starts to rattle, replace it.

3. Checking and adjustment of clutch

◎ As Friction Plates wear out, the clutch becomes easy to slip. When this happens, readjust the clutch using clutch adjusting tools.

1) Remove Hex. Socket Cap Plug 1/8” from Gear Case by Hex. Bar Wrench (5mm).

2) Insert the tip of Clutch Adjusting Pin into the hole, where the plug 1/8” is removed, in parallel with the main shaft. While doing this, slowly turn the Main Shaft by hand and further insert Clutch Adjusting Pin till the Main Shaft is locked.

3) Hold Clutch Adjusting Pin by your hand, hang the Spanner 36mm on the Main Shaft. Using Torque Wrench, fasten the clutch.

Model	Tightening Torque	Tightening Direction
SPN-202Uw	87N･m	Left

⚠ CAUTION
Tightening more than specified value might cause the damage to clutch adjusting pin and Drill Motor.

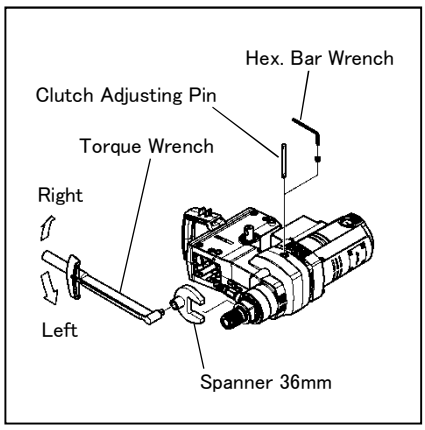

4) After completion of 1) - 3), pull out Clutch Adjusting Pin. Hang Single-ended Wrench 36mm on the Main Shaft and then stick the main shaft by a handle of the wrench touching the pole. Make sure that the main shaft is locked. Turn the motor switch on for just a moment and make sure that the clutch is slipping without motor locking.

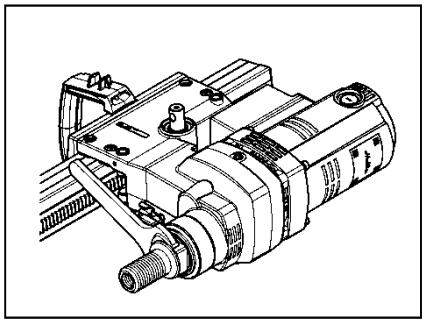

⚠ WARNING
Be careful for the position of Single-ended Wrench 36mm touching on pole. (See the drawing)

5) After making sure the clutch is slipping, install Hex. Plug 1/8” back into the hole.

4. Checking of attaching screws

◎ Check every attaching screws for loosening periodically. If found loose, tighten it.

9. FOR REPAIRING

◎ For repairing your machine, contact CONSEC's authorized representative.

10. WARRANTY

We will guarantee the HAKKEN Core Drill SPN-202Uw for 6 months from the date of delivery. During this period we will rectify material and production defects free of charge. We are not responsible for any other damage direct nor indirect other than this. This warranty does not cover normal wear and tear, overloading, non-compliance with the operating instructions and intervention by unauthorized persons or the use of parts from other companies.

MEMO

MEMO

MEMO

MEMO

CONSEC CORPORATION

Main office : 4-6-8 Shoko Center Nishi-ku Hiroshima 733-0833 Japan

International Department : 1-7-5-1, Sakaimachi, Naka-ku, Hiroshima, 730-0853 Japan

Phone : 81-82-297-3231 Fax : 81-82-297-3230

E2280-1